BLE and UART Transparent Transmission Module

Manual

Version: 1D

http://wch.cn

1. Overview

The BLE and UART transparent transmission module (BLE-TPT) is developed based on CH9141 (BLE and UART transparent transmission IC). It supports BLE4.2. The module supports broadcast mode, master mode and slave mode. It can be configured by serial port AT commands and Bluetooth. The baud rate can be up to 1Mbps. In BLE device mode, parameters such as BLE name and manufacturer information can be modified, which also can be configured through APP and serial port commands quickly and easily.

Providing PC-side virtual serial drivers can directly call Bluetooth interfaces through the serial port, which is compatible with serial debug applications, with no secondary development required, easy to communicate with serial ports, easy to get rid of the cable limit.

BLE-TPT product selection:

Part No.	Appearance	Features
BLE-TPT-A-ANT	BLE-TPT-A	Onboard antenna. Small size. Built-in 32M crystal.
BLE-TPT-B-ANT	BLE-TPT-B 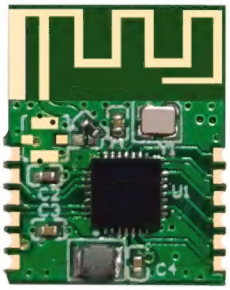	Onboard antenna. Built-in 32M crystal. Partial functional pins.

Some application block diagrams of CH9141:

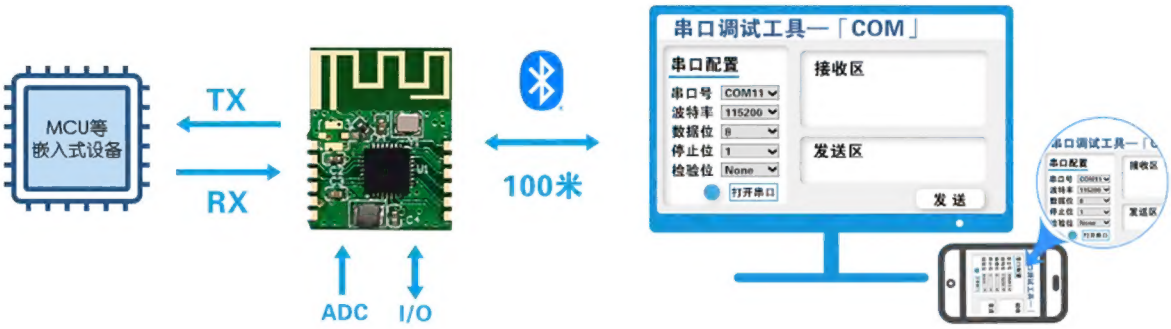

Figure 1 Block diagram of serial communication between BLE host and UART device through CH9141

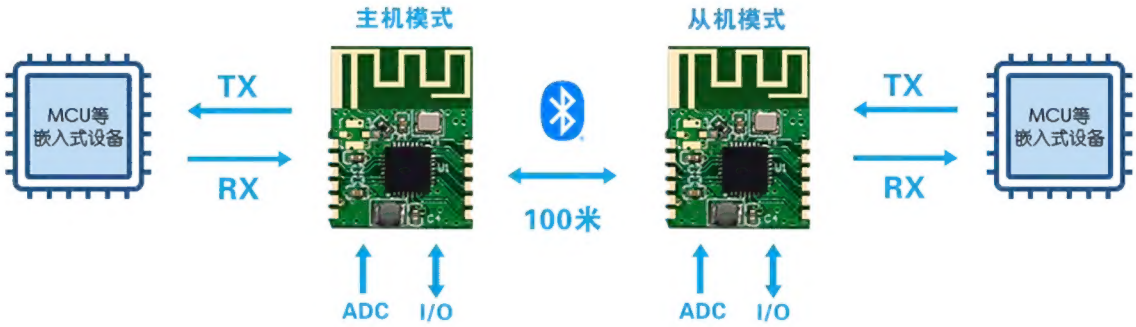

Figure 2 Block diagram of communication between MCUs or UART devices through CH9141 in BLE master-slave mode

2. Features

- Supports broadcast mode, master mode and slave mode.
- Supports serial port AT configuration and BLE transfer configuration.
- Provides PC-side BLE virtual serial port driver.
- Compatible with existing serial port software and tools, with no secondary development required.
- Supports BLE host connection in Windows/Linux/Android/iOS and other systems.
- Provides general GPIO and synchronous GPIO functions. Supports BLE control.
- Supports 1-channel 12-bit ADC acquisition. Supports BLE read.
- Power-down sleep current: 0.3uA.
- Transfer distance: 100 m.
- Adjustable 8 positions of TX power.
- Supports 3.3V and 2.5V operating voltages.
- Asynchronous serial port default baud rate is 115200bps.
- Serial port supports MODEM signals: RTS, DTR, DCD, RI, DSR, CTS.
- Serial port supports 5/6/7/8 data bits and 1/2 stop bits.
- Serial port supports odd, even, no parity, space 0 and mark 1.
- Supports obtain the chip supply voltage parameters.

3. Package size and pins of BLE-TPT-A

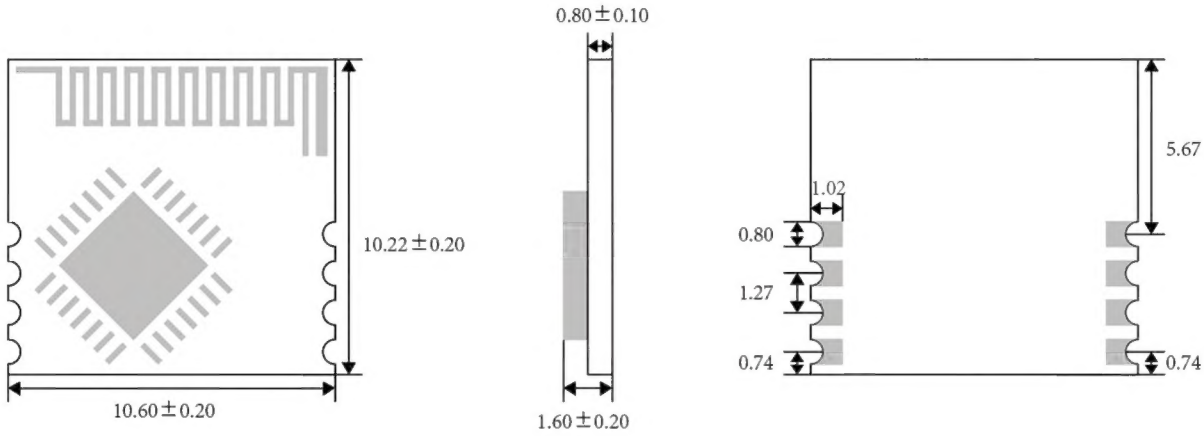

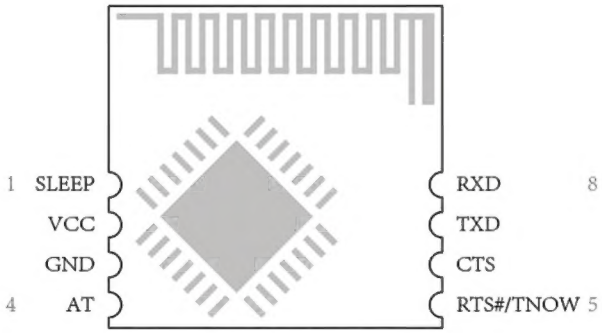

Pin No.	Pin Name	Pin Type	Description
1	SLEEP	I	Low-power control pin, active low, with built-in pull-up resistor
2	VCC	P	Power input
3	GND	P	Ground
4	AT	I	AT transparent transmission function switch pin 0: AT mode. 1: Transparent transmission mode.
5	RTS# /TNOW	I/O	RTS#: MODEM output signal, request to send, active low. TNOW: RS485 receive/transmit switch control pin of UART (Note 2)
6	CTS	I	MODEM input signal, clear to send, active low
7	TXD	O	UART transmit pin
8	RXD	I	UART receive pin

Note (1): P: Power. I: Input. O: Output.

Note (2): RTS#/TNOW is set to pull-up input after powered on, which is defaulted to high level. An external 4.7K pull-down resistor can be connected to set it to low. After powered on, the functions of the RTS# and TNOW pins are selected according to the input level. The TNOW pin outputs high level by default when UART transmits data, and outputs low level when UART does not transmit data.

4. Recommended bonding pad size for BLE-TPT-A

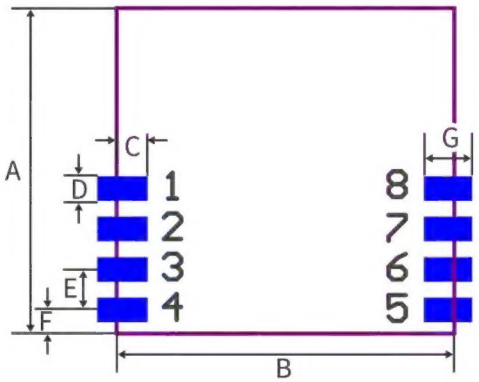

Symbol	Value	Unit
A	10.22	mm
B	10.6	
C	1.02	
D	0.8	
E	1.27	
F	0.74	
G	1.7	

5. Package size and pins of BLE-TPT-B

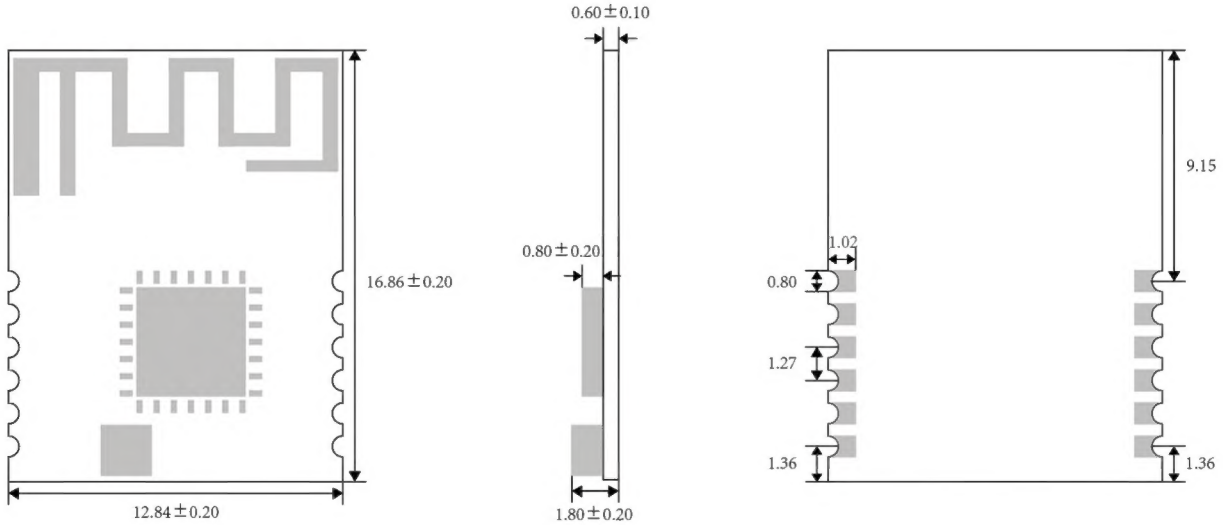

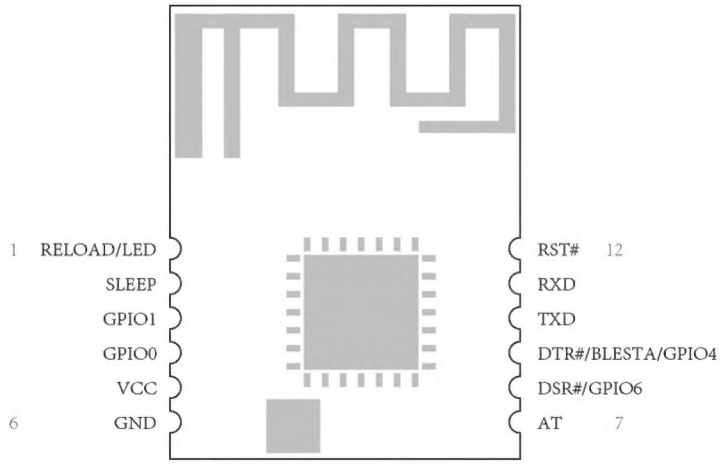

Pin No.	Pin Name	Pin Type	Description
1	RELOAD /LED	I/O	Restore factory setting input pin (RELOAD) when powered on. Restore the factory settings after a low level is detected for 2 seconds continuously. Chip status indication signal output pin (LED) after powered on, active low.
2	SLEEP	I	Low power control pin, active low, with built-in pull-up resistor
3	GPIO1	I	Synchronous input IO
4	GPIO0	O	Synchronous output IO
5	VCC	P	Power input
6	GND	P	Ground
7	AT	I	AT transparent transmission function switch pin 0: AT mode. 1: Transparent transmission mode
8	DSR# /GPIO6	I/O	DSR#: MODEM input signal of UART. Data device ready. GPIO6: General-purpose input output (IO) (Note 2)

9	DTR# /BLESTA /GPIO4	I/O	DTR#: MODEM output signal of UART. Data terminal ready. BLESTA: BLE connection status output (Note 3) GPIO4: General-purpose input output (IO)
10	TXD	O	UART transmit pin
11	RXD	I	UART receive pin
12	RST#	I	Reset pin, active low.

Note (1): P: Power. I: Input. O: Output.

Note (2): The DSR#/GPIO6 pin provides alternate functions, and it is DSR# by default. The user can use AT or APP to enable the GPIO function. After enabled, the DSR# function is invalid.

Note (3): The DTR#/BLESTA/GPIO4 pin provides alternate functions, and it is DTR# by default. It is set to pull-up input after powered on, which is defaulted to high level. An external 4.7K pull-down resistor can be connected to set it to low level. After powered on, the functions of the DTR# and BLESTA pins can be selected according to the input level. The BLESTA pin outputs low level by default when BLE is not connected, and outputs high level after BLE is connected. GPIO can be set and enabled using AT or APP. After the GPIO function is set, the DTR#/BLESTA function of this pin becomes invalid.

6. Recommended bonding pad size for BLE-TPT-B

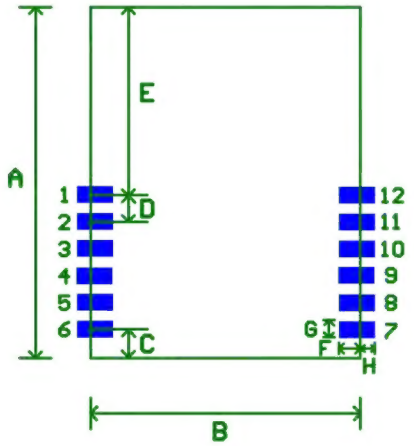

Symbol	Value	Unit
A	16.86	mm
B	12.84	
C	1.36	
D	1.27	
E	9.15	
F	1.05	
G	0.8	
H	0.65	

7. Layout

The upper part of the module is the onboard antenna, and the layout of antenna is related to quality of wireless communication. Good communication quality can ensure a stable data transmission rate. The module can run separately without extra ground plane, but when it is installed on the other PCB, it should be noted: Antenna area must be far away from other metal components, and the distance must be greater than 20mm. Any conductor near the antenna may seriously affect the antenna radiation pattern.

The figure below shows the reference layout of the module. The first three cases are correct, as long as the ground plane does not exceed the ground plane edge of the module. The last three cases are incorrect. The example on the left is incorrect because there is a ground plane under the antenna, the middle example is incorrect because there is not enough gap around the antenna, and the last example is incorrect because battery metal casing is not far away from antenna area.

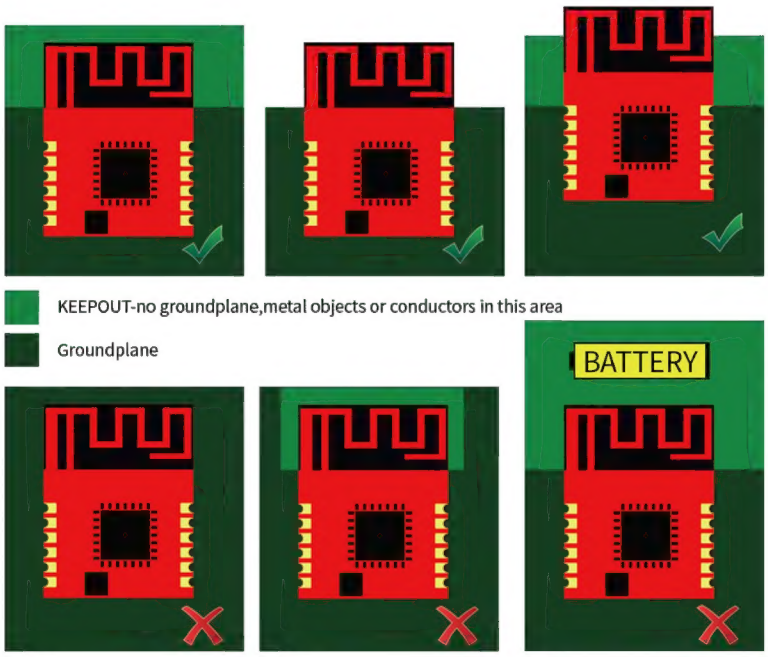

8. Functional description

8.1 Master mode

The master mode of the module is only available for WCH CH914x slave devices. The module supports scan connection and direct MAC address connection when in master mode. The device displayed by the scan is only a CH914x slave device. At the end of the scan, the results displayed by the scan can be used for serial number connection. Enter the serial number and slave connection password in AT mode for connection. Or directly enter the MAC address and password of the slave to be connected without scanning. Then the chip will automatically connect to the device. The module in master mode supports set the MAC for automatic connection. If set, the host will automatically connect to the device after initialization, without scanning or other operations.

8.2 Slave mode

In slave mode, the chip will transmit fixed broadcast data and support modify the chip name in the scan response data, that is, the chip name described below. The default broadcast interval is 100mS. The slave supports four basic BLE services. The transparent transmission service UUID is 0xFFF0.

For description of 0xFFF1, 0xFFF2 and 0xFFF3 communication UUIDs, please refer to the following table.

UUID	Property	Description
0xFFF1	Notice	The data received by UART will be transmitted to the host through this channel, and the host needs to enable notification. The data will be packaged in the size of MTU, and the remaining data will be transmitted by the chip in separate package.
0xFFF2	Write only	Host transmit data channel, data will be sent out through UART.
0xFFF3	Read, write	Configuration channel, IO synchronization and other functions.

8.3 Serial transparent transmission function

A UART is used for the serial transparent transmission, and the default baud rate is 115200bit/s. The UART receive buffer of the chip is 512-byte. The UART performs BLE transmission in real time while receiving data. It is recommended to ensure the end of data transmission when performing AT configuration. During AT configuration, the currently received transparent transmission data will be lost if not saved, and data that has been saved in the receive buffer will continue to be sent when exiting the AT mode. The data received by the BLE will be sent directly to the UART, and the data will not be temporarily stored. When there is a lot of BLE data, the BLE will wait to transmit. If it has entered the AT mode currently, the data received by the BLE will be directly discarded. It is recommended that the host make some speed restrictions when sending to reduce packet loss and buffer overflow.

As BLE communication rate is related to its environment, it is recommended to use CTS/RTS flow control to prevent buffer overflow when the serial baud rate exceeds 9600bit/s and average RSSI of BLE is less than -70dBm.

For details, please refer to CH9141 datasheet.

9. Schematic diagram for reference

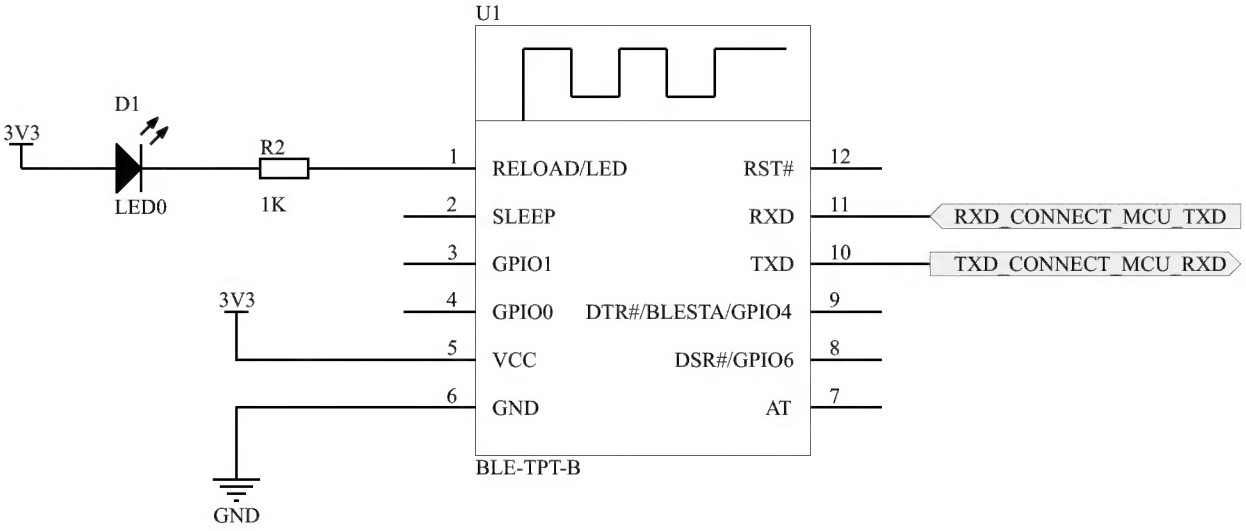

10. Reflow soldering conditions

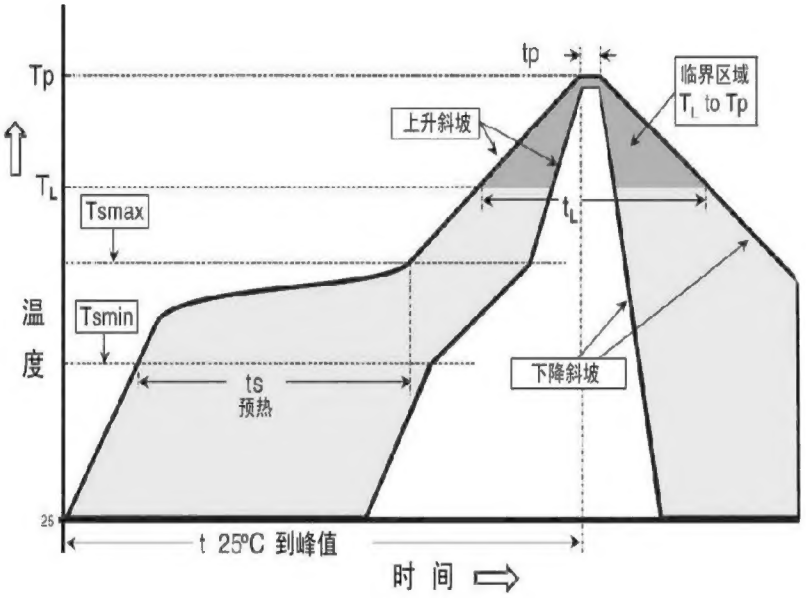

Moisture Sensitivity Level	MSL3
Average slope rise rate (TL to TP)	Max 3°C/s
During warm up Minimum temperature (Tsmin) Maximum temperature (Tsmax) Time (minimum – maximum) (ts)	 150°C 200°C 60-180s
Tsmax – TL slope rise rate	Max 3°C/s
During hold Temperature (TL) Time (tL)	 217°C 60-150s
Peak temperature (Tp)	260+0/-5°C
Time when actual peak temperature is within 5°C (tp)	20-40s
Slope descent rate	Max 6°C/s
Time from 25°C to peak temperature	Max 8 min